**Vision Fire & Security**

VESDA®

# Maintenance Guide

March 7, 2005

Part: 30010

Vision Systems

## Copyright Information



## Disclaimer

The manufacturer reserves the right to change designs or specifications without obligation and without further notice. VESDA, LaserTEKNIC, LaserPLUS, LaserSCANNER, LaserCOMPACT, LaserFOCUS, VESDAnet, VESDAlink, ASPIRE, ASPIRE2, AutoLearn, VSM, VConfig, InfoWORKS, PROACTIV, PRECISION, VSC, ADPRO, FastTrace, FastVu, FastScan, Axiom, PRO, Amux, Video Central, Millbank and VxLAN are brands and trade marks used under license by the distributor.

## FCC Compliance Statement

This equipment has been tested and found to comply with the limits for a Class B digital device, pursuant to part 15 of the FCC Rules. These limits are designed to provide reasonable protection against harmful interference in a residential installation. This equipment generates, uses and can radiate radio frequency energy and, if not installed and used in accordance with the instruction, may cause harmful interference to radio communications. However, there is no guarantee that interference will not occur in a particular installation. If this equipment does cause harmful interference to radio or television reception, the user is encouraged to try to correct the interference by one or more of the following measures; re-orientate or relocate the receiving antenna, increase the separation between the equipment and receiver, connect the equipment to a power outlet which is on a different power circuit to the receiver or consult the dealer or an experienced radio/television technician for help.

## General Warning

This product must only be installed, configured and used strictly in accordance with the General Terms and Conditions and the technical documentation available from VFS International Pty Ltd (VFS). You acknowledge that you have read and agree to those terms and conditions. All proper health and safety precautions must be taken during the installation, commissioning and maintenance of the product. The product should not be connected to a power source until all the components have been installed. Proper safety precautions must be taken during tests and maintenance of the products when these are still connected to the power source. Failure to do so or tampering with the electronics inside the products can result in an electric shock causing injury or death and may cause equipment damage. VFS is not responsible and cannot be held accountable for any liability that may arise due to improper use of the equipment and/or failure to take proper precautions. Only persons trained through an accredited VFS training course can install, test and maintain the product.

## Limitation of Liability

This product must only be installed, configured and used strictly in accordance with the General Terms and Conditions, this manual and the technical documentation available from VFS International Pty Ltd. You acknowledge that you have read and agree to those terms and conditions.

You acknowledge that you have been provided with a reasonable opportunity to appraise the product and have made your own independent assessment of the fitness or suitability for your purpose. You acknowledge that you have not relied on any oral or written information, representation or advice given by or on behalf of VFS or its representatives.

VFS has no liability to you or any person for incidental or consequential loss, expense or damages including, without limitation, loss of business, loss of profits or loss of data. You indemnify VFS for any claim, amount or liability brought against VFS in connection with the product.

You expressly agree that you assume the entire risk as to the results and performance of the product resulting from the configuration of the product. VFS does not warrant, guarantee or make any representations, either expressly or implied, regarding the current or future use, or the results of the use, of the product, with respect to its correctness, accuracy, reliability, completeness, interworking, functionality, currentness or otherwise resulting from the configuration of the product.

To the full extent permitted by law, VFS expressly excludes all conditions, warranties and liability, whether imposed or implied by statute or by rule of law or otherwise, which are not expressly set out in the General Terms and Conditions.

To the extent permitted by law, your sole recourse for any defect of, damage to, or performance standard of the product will be under the express warranties the General Terms and Conditions (if applicable) and VFS will in no event be liable to pay any amount or damages resulting from or in connection with the product.

To the extent by law that any limitation or exclusion can not apply, the total liability of VFS in relation to the product is limited to:

(i) in the case of services, the cost of having the services supplied again; or

(ii) in the case of goods, the lowest cost of replacing the goods, acquiring equivalent goods or having the goods repaired.

To the extent permitted by law, VFS has no liability with respect to damage to or arising out of, or the condition or performance of, the product resulting from (i) negligence or improper use, storage, installation, configuration commission, service maintenance or handling of the product (where 'improper' includes treatment other than in accordance with the product manual, these terms and conditions or the information provided at a training session); (ii) accident, unforeseeable circumstances or disaster; (iii) modifications to the product other than in accordance with VFS's instructions; (iv) attachment of or interoperation with features, software or products not approved by VFS in writing; or (v) where the product has been serviced by persons not authorized by VFS in writing to service the product.

## Product Warranty Conditions

VFS International Pty Ltd (**VFS**) warrants that new products (excluding consumable items) will conform to its published specifications and remain in good working order during the warranty period of 24 (twenty four) months from the date an invoice is issued by VFS to its distributor.

VFS also warrants that products serviced or repaired by its service department will remain in good working order for a warranty period of 12 (twelve) months from the date of service. This service or repair warranty is only available on products less than 7 (seven) years old and only covers those component parts of the products serviced, repaired or replaced.

Should product under warranty not be in good working order, VFS will, at its option, either repair or replace the product or its component parts at no additional charge.

Spare parts and replacement product, covered under this warranty, will be furnished on an exchange basis and will, at the option of VFS either be new, equivalent to new or reconditioned. Returned parts and products to VFS become the property of VFS.

This warranty does not cover the repair or damage to the product resulting from or arising out of (i) negligence or improper use storage, installation, configuration, commission, service, maintenance or handling of the product (where 'improper' includes treatment other than in accordance with any manual or instructions for use of the product); (ii) accident, unforeseeable circumstances or disaster; (iii) modifications to the product other than in accordance with VFS's instructions; (iv) attachment of features or interoperation with features, software or products not approved by VFS in writing; or (v) where the product has been serviced by persons not authorized by VFS in writing to service the product.

## Document Conventions

The following typographic conventions are used in this document.

| Convention | Description |
|---|---|
| **Bold** | Used to denote: emphasis<br>Used for names of menus, menu options, toolbar buttons |
| *Italics* | Used to denote: references to other parts of this document or other documents. Used for the result of an action |

The following icons are used in this document

| Convention | Description |
|---|---|
|  | Caution: This icon is used to indicate that there is a danger to equipment. The danger could be loss of data, physical damage, or permanent corruption of configuration details. |
|  | Warning: This icon is used to indicate that there is a danger of electric shock. This may lead to death or permanent injury. |
|  | Warning: This icon is used to indicate that there is a danger of inhaling dangerous substances. This may lead to death or permanent injury. |

## Contact Us

| Australia and Asia | The Americas | Europe & Middle East |
|---|---|---|
| Vision Systems<br>Private Bag 215<br>495 Blackburn Road<br>Mount Waverley VIC 3149<br>Australia<br>Toll free: 1800 700 203<br>Tel: +61 (0) 3 9211 7200<br>Fax: +61 (0) 3 9211 7201 | Vision Systems<br>700 Longwater Drive<br>Norwell,<br>Massachusetts, 02061<br>USA<br>Toll free: 800 229 4434<br>Tel: +1 78 740 2223<br>Fax: +1 78 740 4433 | Vision Systems<br>Vision House, Focus 31,<br>Mark Road<br>Hemel Hempstead<br>Hertfordshire HP2 7BW<br>United Kingdom<br>Tel: +44 (0) 1442 242 330<br>Fax: +44 (0) 1442 249 327 |

www.vesda.com www.adpro.com.au www.millbank.co.uk

## Codes and Standards Information

We strongly recommend that this document is read in conjunction with the appropriate local codes and standards for smoke detection systems and electrical connections. This document contains generic information and some sections may not comply fully with all local codes and standards. In these cases, the local codes and standards must take precedence.

## FM 3611 Hazardous Approval Warning

Exposure to some chemicals may degrade the sealing of relays used on the detector. Relays used on the detector are marked "TX2-5V" or "G6S-2-5V" or "EC2-5NU".

## UL Warning

The fire alarm threshold (signal) that initiates an evacuation procedure via the Fire Alarm Panel must not be set higher than 0.625%/ft. The detector can send this signal either via the Fire Alarm Panel Output signal or the Pre-alarm output signal.

## Safety Label

This VESDA product incorporates a laser device and is classified as a Class 1 laser product that complies with FDA regulations 21 CFR 1040.10. The laser is housed in a sealed detector chamber and contains no serviceable parts. This laser emits invisible light and can be hazardous if viewed with the naked eye. Under no circumstances should the detector chamber be opened.

Document: 10256_01

# 1.1 Scope

The VESDA Maintenance Guide provides information on maintaining a VESDA Laser System. It suggests a maintenance schedule and provides instructions on how to service and maintain the different components making up a VESDA Laser System.

This guide is written for persons responsible for the maintenance of VESDA installations.

It is assumed that persons maintaining a VESDA Laser System are knowledgeable about the local fire and electrical codes and standards. It is suggested that the VESDA Laser System be serviced and maintained by persons who have an understanding of VESDA Laser Products and Aspirating Smoke Detection Systems.

# 1.2 Introduction

To maintain the VESDA Laser System at its peak performance level, the suggested maintenance schedule should be followed. Maintenance can be conducted by the original installer, a VESDA distributor, or a service contractor. The efficient operation of a VESDA Laser System requires that the VESDA Laser Detectors are supported by a well designed and maintained pipe network. The site conditions, and the local codes and standards may require more regular maintenance than the VESDA suggestions.

| **Maintenance Check** | **Monthly** | **Six Monthly** | **Annual** | **Every Two Years** |
|---|---|---|---|---|
| Power Supply | a | | | |
| Pipe Network | | a | | |
| In-Duct Pipe Test | | a | | |
| Filter Inspection | | a | | |
| Raw Air flow | | a | | |
| Pipe Integrity Smoke Test | | | a | |
| Check Pipe Flow | | | a | |
| Cleaning Sampling Points | | | | a |
| Flushing Pipe Network | | | | a |

This section contains information on the suggested maintenance procedures for all VESDA systems, and the maintenance procedures required for each type of VESDA Laser Detector.

# 1.3 Maintenance Procedures

This section contains information on the suggested maintenance procedures for all VESDA systems, and maintenance procedures which are specific to each type of VESDA Laser Detector.

# Maintenance Procedures for all VESDA Systems

The maintenance procedures and schedules suggested in this manual are the recommendations made by Vision Systems. If the local codes and standards for the site require more frequent maintenance then adapt the Vision Systems recommendations.

## Checking the Power Supply

The power supply to the VESDA Laser System should be checked every month, or as required by local codes and standards. VESDA Laser Products are designed to operate between 24 VDC and 30 VDC. We recommend at least checking the supply voltage, output voltage, battery state and the correct operation of the fault relays.

## Maintaining the Pipe Network

Most maintenance procedures require the VESDA system to be isolated during maintenance and testing. Failure to isolate the system may lead to false alarms. When a VESDA Address (also called Zones) has to be isolated, no fire warnings will be issued by the VESDA Laser Detector and any fire will go undetected. Prior to isolating a VESDA Zone for maintenance:

- Inform appropriate supervising authority about the risk associated with Isolating a VESDA Address (also called Zones).
- Ensure that any ancillary devices dependent on the detector are appropriately isolated.

**Inspecting Pipe Network**

It is suggested that the pipe network is checked every six months. Where possible the pipes and the connections should be checked to ensure that the pipe runs are intact and that the network is free of dirt and dust.

To conduct a pipe network Inspection:

1. Inform supervising authority and isolate all VESDA Addresses (also called Zones) prior to testing
2. Without disturbing the pipe network inspect each pipe run to its full length for any obvious breaks
3. Examine all pipe joints to ensure these are firmly secured
4. Ensure end caps are set firmly in place
5. If capillary sampling is used, ensure that the capillaries have not become loose

Conduct a simple smoke test. If the system fails to respond it may be necessary to clean the pipes see *Cleaning Sampling Points* on page 3 for details.

## Checking the Raw Airflow

It is suggested that the Raw Airflow is recorded once every six months. Progressive decreases in the raw Airflow readings may indicate a blockage developing inside the pipe network. The current percentage airflow readings reflects the difference in airflow percentage since the last airflow normalization and may not inform the absolute increase or decrease in airflow through the pipe network.

**Note:** Separate raw airflow results must be recorded for each pipe. When comparing successive raw airflows, ensure that the values compared are for the respective pipes.

Refer to the VESDA *LCD Programmer Product Guide* and the VESDA *PC Software Online Help* for details on how to measure Raw Airflow.

## Pipe Integrity Smoke Test

A pipe integrity test should be conducted every twelve months. A smoke test is necessary to prove the integrity of the pipe network and to measure the response time. Prior to isolating for testing:

- Inform appropriate supervising authority about the risk associated with Isolating a VESDA Address (also called Zones).
- Ensure that any ancillary devices dependent on the detector are appropriately isolated.

Record results for:

- Transport Time - Sample smoke is introduced at the furthest sampling hole from the detector. The time taken (in seconds) for the smoke to travel to the detector is measured and recorded. Typically, allowing for small variations, the result should be approximately the same as the ASPIRE2 calculations. In the event there is a wide variation between ASPIRE2 results and the actual smoke test results, the pipe network should be checked for leaks and blockage.
- Initial Response - This is the total of the time taken for the smoke to travel from the source to the sampling point and the detector first registering the presence of smoke (excluding any Alarm Delay Times that may have been set).
- Alert Response - This is the total time taken for the smoke to travel from its source and the detector generating an alert alarm.
- Action/Pre-Alarm Response - This is the total time taken for the smoke to travel from its source and the detector generating an action/pre-alarm status (Pre-Alarm is generated in LaserCOMPACT Detectors).
- Fire 1/Fire Response - This is the total time taken for the smoke to travel from its source and the detector generating a Fire 1/Fire Alarm (Fire Alarm is generated in LaserCOMPACT Detectors).
- Fire 2 Response - This is the measure of the total time taken for smoke to travel from its source and the detector registering a Fire 2 Alarm.
- Peak Smoke Response - This is the time taken for the detector to record the peak level of smoke. The numerical display of the display module or the LCD Programmer will display the smoke levels. This information can also be extracted from the Event Log.

## Cleaning Sampling Points

It is suggested that sampling points be cleaned at least once every two years. Reduce the scheduled period to suit harsh site environments. Cleaning is required to remove any dust build up and to ensure that the sampling point holes and capillary tubes are not blocked.

To clean sampling points:

1. Inform supervising authority and isolate all VESDA Addresses (also called Zones) prior to cleaning.
2. Remove capillary tubes from the main sampling pipe.
3. Dismantle the sampling point from the capillary tube.
4. Ensure that all the pipes are disconnected from the detector pipe inlet manifold. If you are not able to loosen clips holding the pipes to the wall you may need to open the detector to remove the manifold.
5. At the detector end of each pipe secure a porous paper or cloth bag.
6. Insert a length of flexible tubing into the sampling pipe sealing any gaps between the sampling pipe and the flexible tubing with self-adhesive tape.
7. Connect the relevant flexible tube to a compressed air source (approx. 400 KPAs) and flush pipes for at least 2 minutes.
8. Visually check to see that the sampling points are not blocked.
9. Reassemble the sampling point and connect it to the capillary tube.
10. Reconnect the capillary tube to the pipe network. If the pipe network is also to be flushed do not connect the capillary tube till after the pipe network has been flushed.
11. For in-duct sampling remove the probes from the duct and follow a similar process.

Normalize the detector and conduct a smoke test to check for broken pipes or joints.

Sites with dirty environments that require very regular pipe and sample point cleaning should consider installing solenoids or other devices to make it easier to access the pipe networks.

### Flushing Pipe Network

It is advisable to perform this procedure in conjunction with the cleaning of sampling points. Flushing is performed to remove dust and debris from the inside of the pipe network. It may take some time to move the debris to the end of the pipe so flush the pipe for two minutes, or longer for longer sections of pipe.

**Warning: Inhalation of dust is hazardous to health. Dust build up may contain potentially dangerous toxic materials. This process must be suitably modified in such instances to negate the risk from toxic materials. Adequate precautions must be taken to comply with local health and safety regulations.**

To back flush the pipe network:

1. Inform supervising authority and isolate all VESDA Addresses (also called Zones) prior to starting to clean.
2. Ensure that all the pipes are disconnected from the detectors pipe inlet manifold. If you are not able to loosen clips holding the pipes to the wall you may need to open the detector to remove the manifold.
3. At the detector end of each pipe secure a porous paper or cloth bag.
4. Seal the sampling holes in the pipe with a self-adhesive tape.
5. Remove the end caps from all the pipes that are to be back flushed.
6. Insert a length of flexible tubing into the sampling pipe sealing any gaps between the sampling pipe and the flexible tubing with self-adhesive tape.
7. Connect the relevant flexible tube to a compressed or pressurized air source (approx. 400 KPAs) and flush pipes for at least 2 minutes.
8. Remove the flexible tube and re-attach the end holes.
9. Remove the flexible tubing from the sampling pipe at the detector end and reconnect the sampling pipes to the detector pipe inlet manifold.
10. Unseal all sampling holes and check for debris.

Normalize the detector and conduct a smoke test to check for broken pipes or joints.

Sites with dirty environments that require very regular pipe and sample point cleaning should consider installing equipment to backflush the pipe networks.

## 1.4 Maintaining VESDA Laser Products

### LaserPLUS and LaserSCANNER Maintenance

The following information contains the maintenance information for VESDA LaserPLUS and LaserSCANNER.

### Replacing Air Filter Cartridge

The service interval of an air filter depends upon the environment. You can use the *LCD Programmer* or VESDA *PC Software guides* to change the service period for filters. The system will generate a minor fault when the filter has reached 80% and an urgent fault when it reaches 120% of its capacity. We recommend the installation date and replacement date are written onto the label on the air filter cartridge as a physical reminder of when the next service is expected.

The detector must have the power turned on when the air filter cartridge is being replaced.

1. Slide down and remove the air filter cover (A)

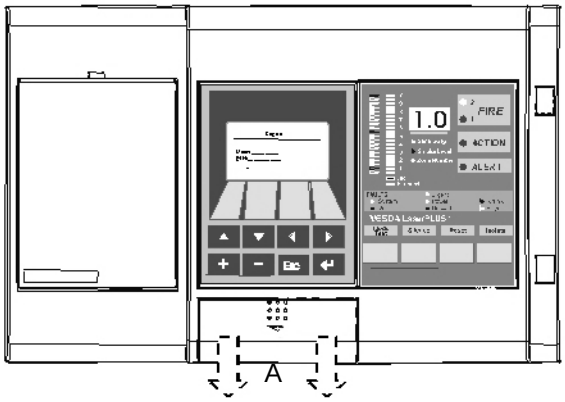


2. Unscrew the recessed phillips head screw (B)

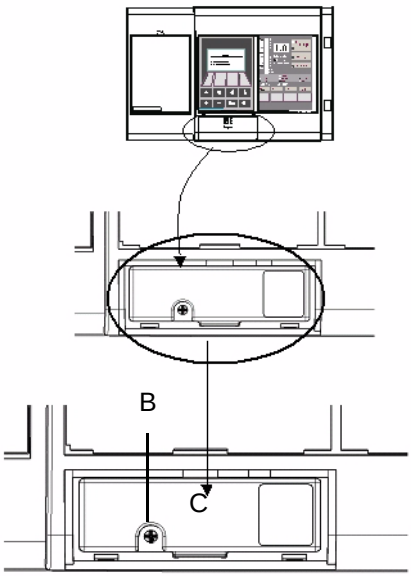


*Figure 1 - Filter replacement*

3. Pull out the air filter cartridge (C)
4. Insert replacement air filter cartridge (VSP-005)
5. Tighten filter screw
6. Replace the air filter cover
7. Reset the filter counter using:

- The LCD Programmer
- PC running Vconfig PRO or VSM3

## Chassis Replacement

1. Isolate unit by pressing the isolate button on the zone configured display or by selecting “Isolate Zone” from the “Zone” menu in VConfig Pro or VSM3. This isolates the inputs from the unit to a fire alarm panel.
2. Save Node Configuration by using VConfig Pro or VSM3, highlight the detector in the device tree window and select “Save Node Configuration” from the “Device” menu.
3. Turn off power by disconnecting the power cables.
4. Remove the front panel by first opening the cover plate and screw covers, then unscrewing the cover plate screws.

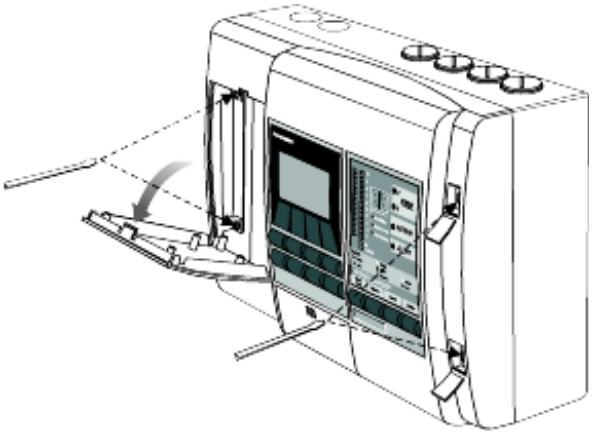

*Figure 2 - Removing front cover*

5. Disconnect data cables that connect the chassis assembly to the termination card, front panel modules (if fitted) and manifold (behind chassis).

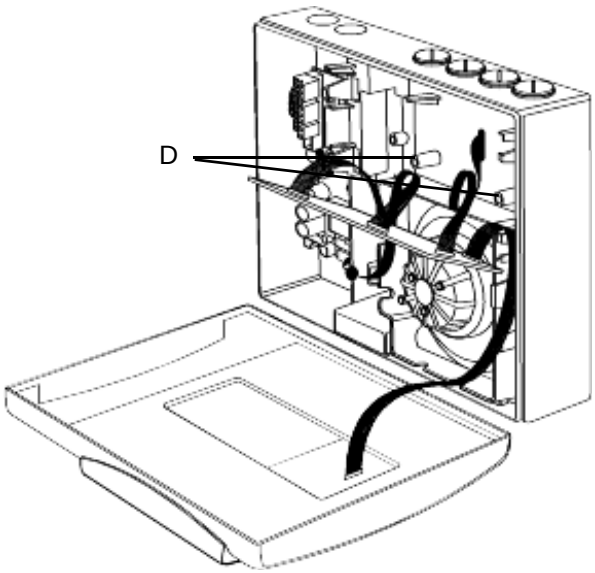


*Figure 3 - Remove data cables*

6. Unscrew the 2 retaining screws (D)
7. Remove Chassis, holding the chassis by the aspirator assembly. Release the two lower locking tabs by lifting the chassis upward and pulling outward. Use a screwdriver to assist with tab release if necessary.

Chassis for VLP is part number VSP-006 and VLS part number is VSP-009.

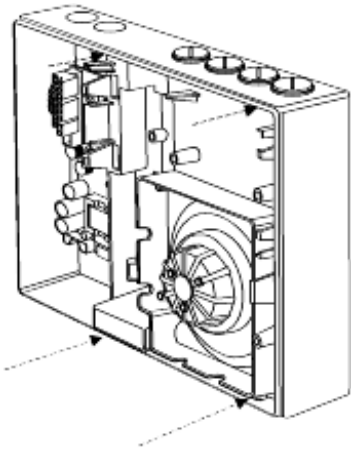

*Figure 4 - Remove the chassis*

**Caution:** Care must be taken not to damage the cable running to the manifold.

**Note:** The detection chamber, head processor card and flow sensors are factory calibrated as a matched set. Separating the set and replacing it with components from another set may cause the Detector to malfunction, requiring re-calibration at the factory.

8. Disconnect the flow sensor lead.
9. Unscrew manifold retaining screws.

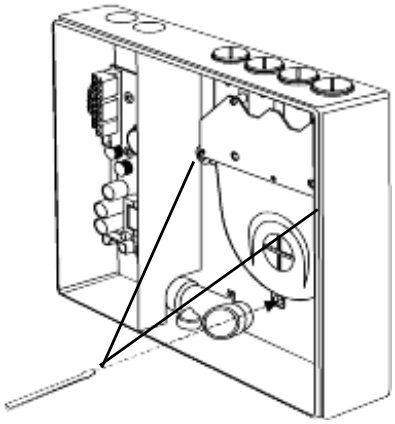

*Figure 5 - Removing Pipe Inlet Manifold*

10. Remove the Manifold by sliding it downward, away from the pipe network.
11. Attach the replacement Manifold and Chassis by reversing the procedure above.
12. Configure the Node using VConfig PRO or VSM3 by highlighting the Detector in the Device Tree Window and highlighting “Restore Node Configuration” from the Device Menu, or reprogram the detector using the LCD Programmer.

**Note:** Ensure that power is turned off before disconnecting Data cables. All Data cables must be connected properly before power is turned on. Failure to observe this requirement may cause data corruption that requires factory re-calibration.

# Replacing LaserPLUS and LaserSCANNER Aspirator

1. Isolate and power down the detector.
2. Open the front cover.
3. Locate the cable loom that connects from the Head Processor Card (HPC) to one of the modules located on the front panel. Unscrew the HPC retaining screw and unclip the card. Mark out this connector position if unsure about the cabling.
4. Remove air filter cartridge.
5. Disconnect cable loom labelled Filter Switch from air filter switch connector located on exhaust pipe elbow.

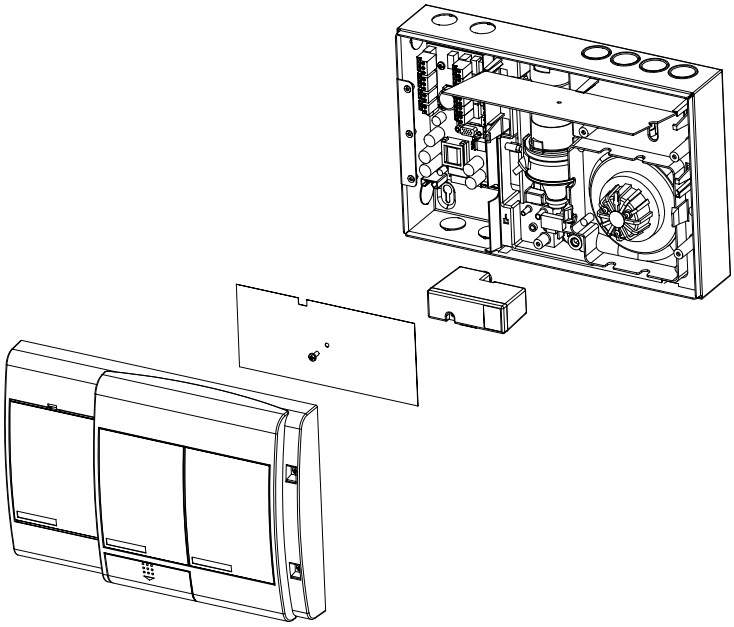

*Figure 6 - Removing Air Filter Cartridge*

6. Remove CPU Card securing screw.

**Warning: Hold CPU Card at the edges. Static charges may damage the CPU Card.**

7. Remove brown insulating sheet and lift up the CPU card.
8. Locate the aspirator cable loom (red, white and blue wires) and disconnect connector from the Central Processor Card.

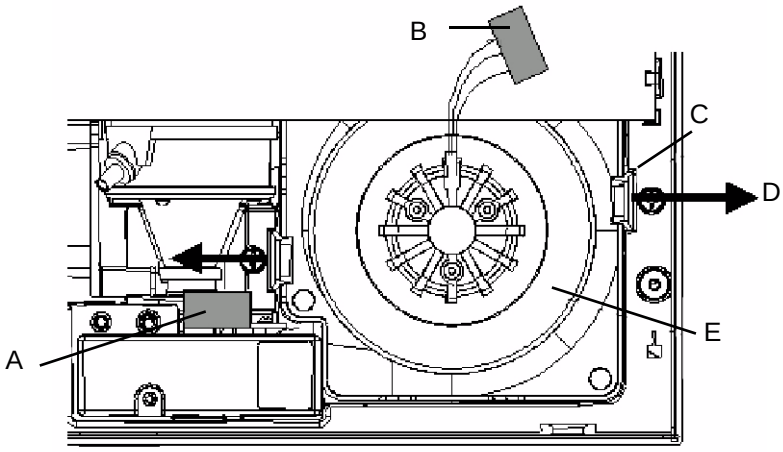


| Legend | |
|---|---|
| A | Filter switch connector socket |
| B | Aspirator loom connector |
| C | Aspirator locking fingers |
| D | Move both locking fingers outwards |
| E | Aspirator (Lift upwards) |

*Figure 7 - Removing CPU Card and Disconnecting Aspirator Cable Loom*

9. Locate the two plastic fingers securing aspirator to chassis.
10. Push fingers outwards and lift out aspirator.

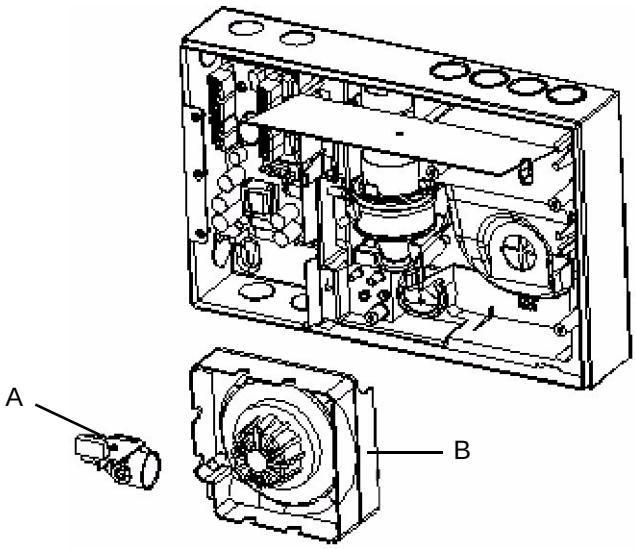


| Legend | |
|---|---|
| A | Exhaust pipe elbow with filter card switch |
| B | Aspirator |

*Figure 8 - Removing Exhaust Pipe Elbow and Aspirator*

11. Remove the exhaust pipe elbow and filter card assembly from the aspirator.

Assembly:

1. Reattach exhaust pipe elbow and filter card assembly to aspirator exhaust outlet.
2. Wipe manifold outlet flange surface if dirty.
3. Slide aspirator in between fingers until fingers lock over aspirator. Check that aspirator does not come off when lifted.
4. Reconnect aspirator cable loom to cable socket on Central Processor Card.
5. Secure Central Processor Card to chassis ensuring the card locks under the plastic fingers.
6. Place insulating sheet over Central Processor card and secure with screw.
7. Re-attach air filter cartridge.
8. Re-connect cable loom to module on front panel.
9. Check all wires are secured to the connectors or terminals.
10. Power ON the detector and check the aspirator is running.
11. Close up the detector as per figure 2, *“Removing front cover,”* on page 6.

## Replacing Modules

Isolate and power down before you begin.

Disassembly

1. Insert a screwdriver at the top between the Module and the Front Cover (See figure 2, *“Removing front cover,”* on page 6).
2. Gently remove the Module from the Front Cover by levering the screwdriver.
3. Disconnect the wire loom from the Module Processor Card.

Assembly

1. Connect the wire loom to the respective 10 or 11 way connector(s) on the Module Processor Card.
2. Secure the Modules to the Front Cover by gently snapping the module into place ensuring that none of the EMC Screening is trapped.
3. Power up the detector.

## LaserSCANNER Valve Inspection and Cleaning

The LaserSCANNER has four valves that open and close to allow the detector to draw air from one pipe at a time. As the air that reaches the valves has not been filtered it may contain dust, dirt, and background pollution such as soot or coal dust.

1. Remove the pipes leading into the LaserSCANNER detector.
2. Using an LCD Programmer select **Scanner Detector.**
3. Then select **Zone Control** and **Scan Start.**
4. Look inside the inlet ports to see that the valves are periodically opening and closing. Also look for evidence of a buildup of dirt.
5. If dirt is found you will need to remove the chassis before flushing the valves. Refer to *Chassis Replacement* on page 6 for details.
6. Remove the air inlet manifold and clean it with compressed air. The manifold is sensitive so do not clean with more than 87 Kpa (6 bar) compressed air.
7. Once clean, reassemble the detector.

# LaserCOMPACT Maintenance

## Filter Replacement

The service interval of an air filter depends upon the environment. You can use the *LCD Programmer* or VESDA *PC Software guides* to change the service period for filters. The system will generate a minor fault when the filter has reached 80% and an urgent fault when it reaches 120% of its capacity. We recommend the installation date and replacement date are written onto the label on the air filter cartridge as a physical reminder of when the next service is expected.

The detector must have the power turned on when the air filter cartridge is being replaced.

1. Open the front cover
2. Locate the air filter cartridge (A) inside the detector compartment.
3. Undo the recessed phillips head filter screw (B).
4. Lift out the air filter cartridge.

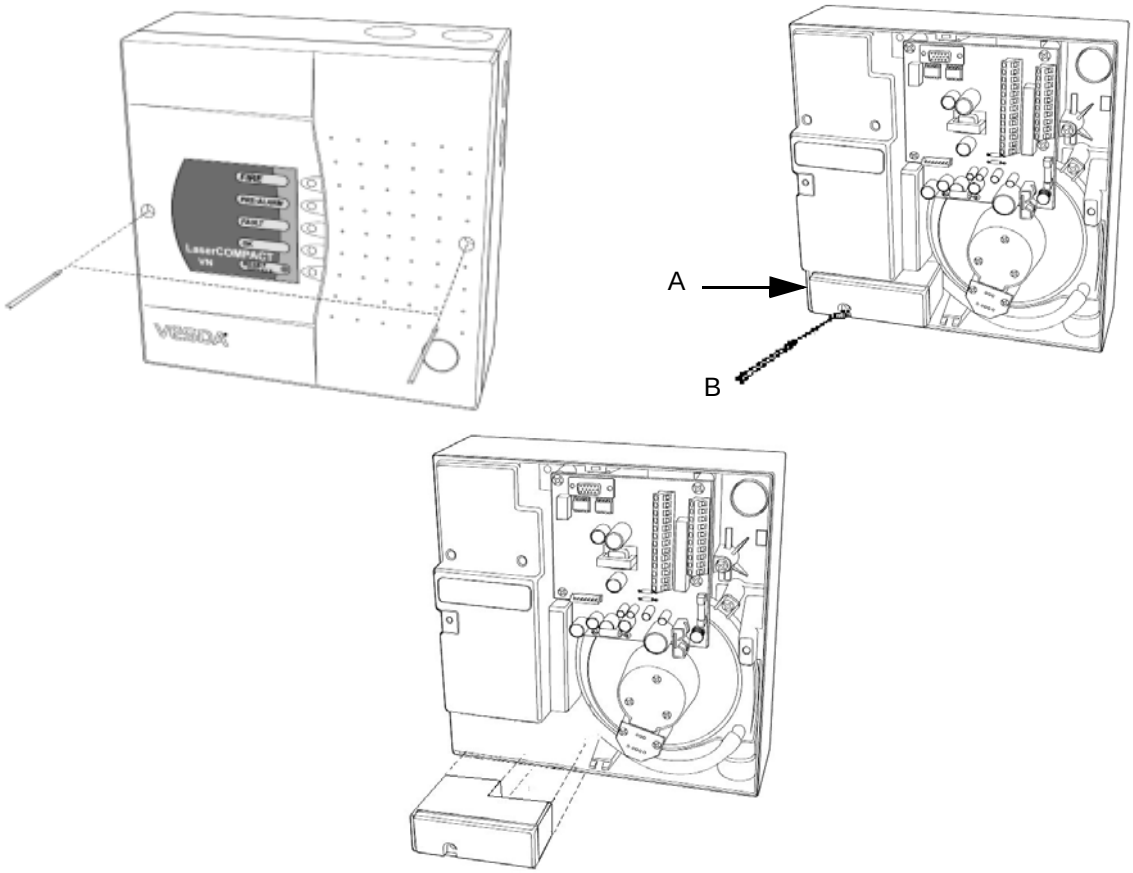


*Figure 9 - Replacing air filter cartridge in LaserCOMPACT*

Assembly:

1. Insert a new air filter cartridge (A).
2. Tighten filter screw (B).
3. Reset the filter counter by connecting a LCD programmer or a PC with VConfig Pro software to the programming socket.

Resetting Filter settings

Using a PC only (Applicable to RO version) or
Using a PC with a PC-Link HLI (Applicable to VN version only):

Enter your user level and PIN number to Log ON to the detector.

Initiate Reset Filter Settings command located under the device menu.

4. Close up the detector

## Replacing LaserCOMPACT Aspirator

Isolate and power down the detector before you begin.

Disassembly:

1. Remove the four screws securing the termination card.
2. Disconnect the aspirator cable loom from the connector on the aspirator.
3. Gently pull out termination card from interface card (connected behind).
4. Be careful not to dislodge any wires connected to the termination card.
5. Leave the termination card suspended by its wires.
6. Pull off the air hose from aspirator pipe.
7. Undo three Phillips head screws securing aspirator. These screws are captive.
8. Turn aspirator anti-clockwise using the exhaust port as the pivot point.
9. Push aspirator upward and remove.

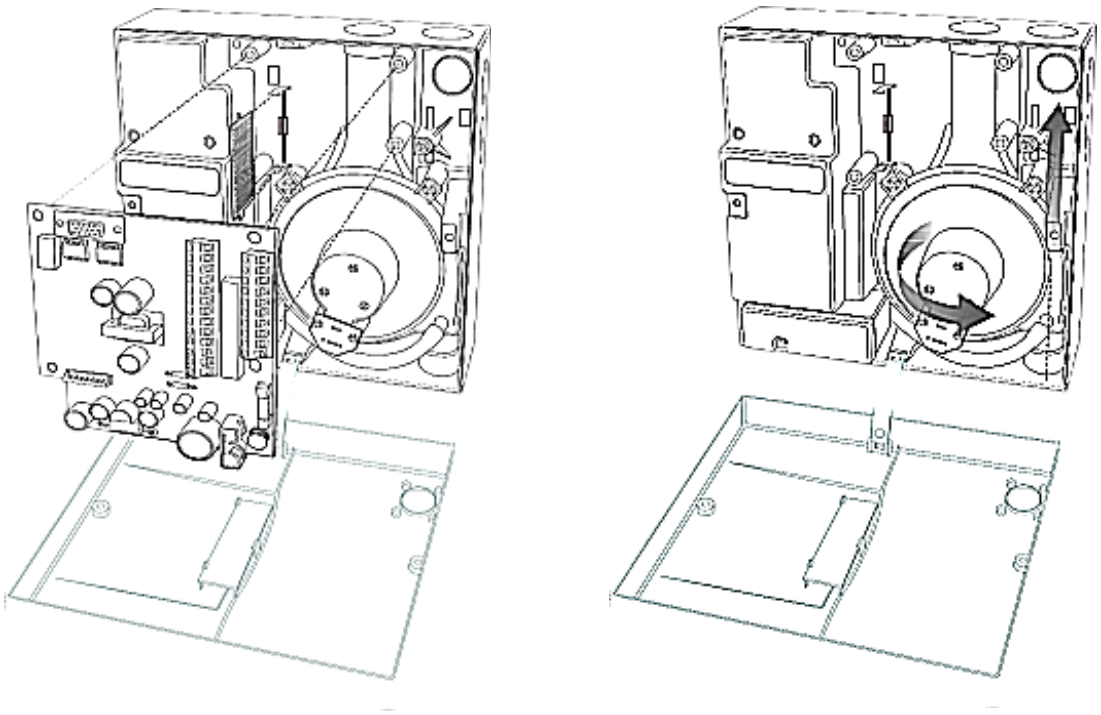

*Figure 10 - Illustration for Replacing the Aspirator*

Assembly

1. Check the new aspirator has a gasket on the inlet flange and three attached screws.
2. Wipe manifold outlet flange surface.
3. Do the reverse of disassembly.
4. Secure aspirator with three screws.
5. Connect removed air hose to pipe on aspirator. Ensure a tight fit over the pipe.
6. Insert Termination Card into interface card.
7. Secure the termination card with four screws.
8. Connect aspirator cable connector to socket on aspirator. Connector is polarized and can only be inserted one way.
9. Check all wires are secured to their connectors or terminals.
10. Power ON the detector and check the aspirator is running.
11. Resolve all Fault conditions.
12. Close up the detector.

## Replacing the Termination Card

**Note:** Disconnect Detector from power source before commencing replacement of Termination Card. Reconnect to 24 VDC power source after replacing and securing the Termination Card.

Disassembly

1. Mark out the wire positions on each terminal socket before removing.
2. Remove all terminal plugs (C) from sockets leaving the wires attached to the plugs.
3. Remove the 10 wire and 13 wire cable looms from its socket (B).
4. Remove the five Phillips head screws (A).
5. Remove the Termination Card.

Assembly

1. Attach Termination Card with five Phillips head screws (A).
2. Reattach the 10 wire and 13 wire cable looms to the sockets. (B) The connectors can only be inserted into the socket one way. Turn the connector around if the connector does not fit into its socket.
3. Reconnect the terminal plugs to its sockets ensuring the plugs are connected to its correct socket (C).

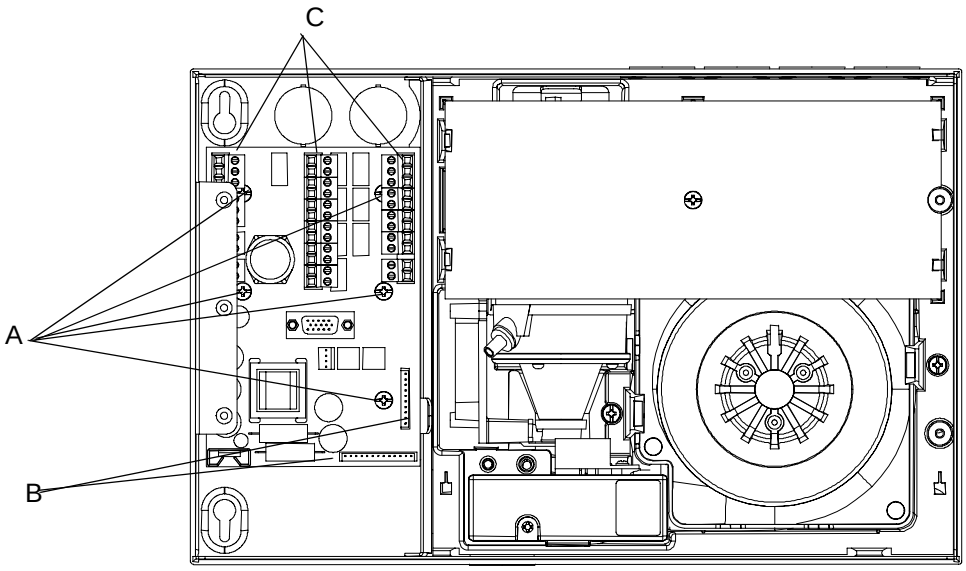


*Figure 11 - Replacing Head Termination Card*

# LaserFOCUS Maintenance

## Filter replacement

The VESDA LaserFOCUS smoke detector uses a disposable dual stage air filter cartridge. This filter removes dust contamination from sampled air and provides a clean air bleed to preserve the detector chamber optics. The detector constantly monitors filter efficiency. To maintain the operational integrity of the smoke detector, it is recommended that the filter be replaced every 2 years, or when a filter fault occurs or more often for environments that experience high levels of contamination.

A fault is raised on the detector, when the filter needs to be replaced. During the replacement process the detector needs to be informed that a new filter has been installed.

**Note:** Prior to any work or maintenance being carried out on the VESDA LaserFOCUS take the necessary steps to advise the monitoring authority that power may be removed and the system disabled.

**Note:** Ensure the area surrounding the filter is clear of dirt and debris prior to replacement.

**Note:** The filter is for single use only, it cannot be cleaned and re-used.

### Filter replacement steps

Ensure the detector remains powered up during filter replacement and a new filter cartridge is available:

1. Push in the security tab and lift up the field service access door (A).
2. Set the detector to ‘Standby’ mode by pressing the Disable button for 6 seconds. The Disabled LED begins to flash. After releasing the Disable button the disabled LED will slowly flash.
3. Undo the recessed retaining screw (C) and pull out the old filter (B).
4. Using your finger, firmly press the filter switch (D) (in the filter recess of the detector) 5 times within 5 seconds to confirm to the detector that a new filter is about to be installed (see inset).
5. Insert the new filter (VSP-005) and tighten the retaining screw.
6. Press the Disable button for 6 seconds to return the detector to normal operation.
7. Record the filter replacement date on the filter.
8. Close the field service access door.

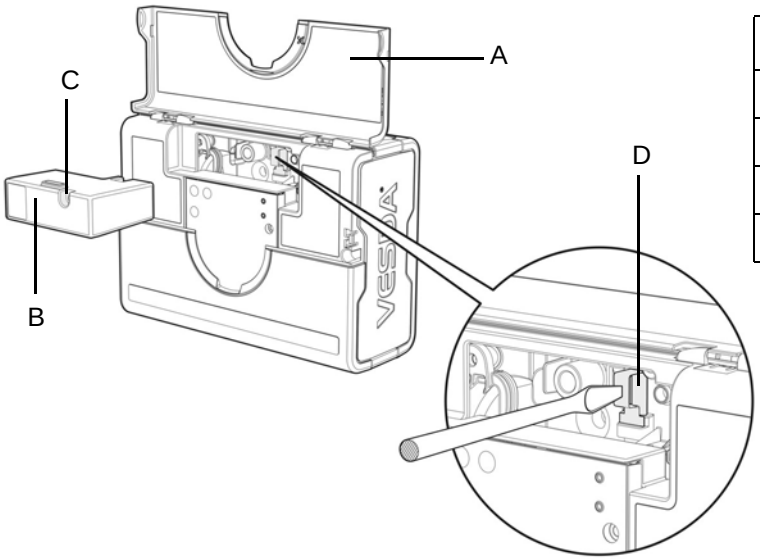


| Legend | |
|---|---|
| A | Field service access door |
| B | Dual stage air filter cartridge |
| C | Retaining screw |
| D | Filter switch |

*Figure 12 - Filter replacement*

## Aspirator replacement

**Note:** Prior to replacing the aspirator advise the monitoring authority that power will be removed and the system disabled.

**Caution:** Electrostatic discharge precautions need to be taken prior to removing the front cover from the detector otherwise damage may occur to the unit.

Aspirator removal (assumes normal mounting, see Figure 13):

1. Disconnect power to the detector.
2. Push in the security tab and lift up the field service access door.
3. Unscrew the two front cover retaining screws, lift and swing down the front cover.
4. Only disconnect the fan wiring loom from the connection point (E) at the aspirator.
5. Undo the retaining screw on the aspirator (A).
6. Swing out the aspirator, then lift and remove it from the detector.

**Note:** Any time the aspirator is removed ensure the area surrounding the aspirator is clear of dirt and debris prior to replacement.

**Note:** Care must be taken during aspirator replacement. The aspirator must be correctly seated; this is essential so that gaskets are not damaged or dislodged from the underside of the aspirator.

### Aspirator replacement steps

1. Clip the aspirator (VSP-715) into the retaining clip (D) and swing it back into the detector.
2. Tighten the retaining screw (A) (**do not over tighten**).
3. Reconnect the fan loom to the aspirator (E).
4. Replace the front cover and screw it into place.
5. Close the field service access door.
6. Reconnect power to the detector.

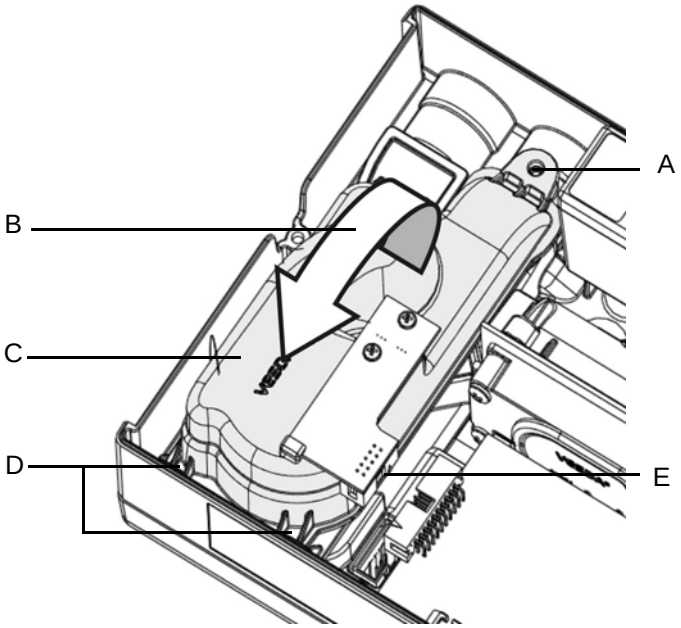


| Legend | |
|---|---|
| A | Aspirator securing screw |
| B | Swing aspirator out to remove |
| C | Aspirator |
| D | Retaining clip points |
| E | Fan loom connector **must** be disconnected here |

*Figure 13 - Aspirator replacement*

# 1.5 Test the System

VESDA systems can be tested in a number of different ways. Most sites will require different types of testing for different customer environments. Before conducting smoke tests you must check to see if the local codes and standards specify which type of smoke test is to be performed. Local codes and standards may also require changes to the general instructions below, where local codes and standards are different to the VESDA suggestions, **ALWAYS** follow the local codes and standards.

Performance testing is done during commissioning and **may** be required during service, but is not essential. We highly recommend pipe integrity testing be performed each year.

# Performance Based Smoke Testing

A smoke test is necessary to prove the integrity of the pipe network and to measure the response time. The type of smoke test required will depend upon the site and the application:

- Warehouses and open areas can use either a smoke pellet test, a polyurethane mat test, or possibly a wooden block test. Please check with the local codes and standards to find the most appropriate type of test for the environment.
- Very sensitive sites can use the electrical overload (PVC coated wire burn test), or the smouldering test coil test. (UK customers can refer to BFPSA Code of Practice Appendix A for system performance test methods).

We recommend that at least two tests are conducted. You must allow the environment to return to the normal conditions before beginning the second test.

Record the date and the type of smoke test used on the commissioning or testing forms. Please re-read the detector manuals if you are unsure of how to interpret smoke levels, alert, alarm or Fire1.

At a minimum, testing requires that you conduct pipe integrity smoke testing.

## Testing and Stratification Problems

In areas with a high roof you can expect the air temperature near the roof to be warmer than the air temperature at ground level. This can cause the stratification of smoke. Stratification occurs when warm smoke rises until it reaches a layer of air with the same temperature and then stops rising. This may cause problems as the smoke may not reach sample points which are mounted on the roof.

As the height of the roof increase you will need a larger distance between the roof and the sampling point to continue correctly sampling the air. Heights up to 3 m (9 ft) can use standard 25 mm (1 in.) standoffs.

| Roof Height (M) | 1 | 2 | 3 | 4 | 5 | 6 | 7 | 8 | 9 |
|---|---|---|---|---|---|---|---|---|---|
| **Distance from roof (mm)** | 30 | 30 | 30 | 100 | 200 | 300 | 400 | 500 | 600 |

For testing purposes you can use a 5.8 kW gas burner or electric heater to add heat to the smoke to make sure it will reach the roof.

# Pipe Integrity Smoke Testing

This test should be used to test pipe integrity in any typical customer site. This method is suitable for the testing of standard sensitivity fire detection systems. You will need a smoke source, a way to time the test, and a fire extinguisher.

It is easy to see an increase of smoke on detectors that have a display module fitted. LaserCOMPACT detectors do not have a display and will require extra smoke as the detector will need to reach pre-alarm stage before they will indicate an increase of smoke.

1. Ensure that the local fire panel is isolated from the external fire reporting equipment and that any automatic extinguishing or suppressant systems are also isolated.
2. Introduce smoke directly into the furthest sample hole in the pipe run, and start the timer.
3. Stop the timer when the detector registers the smoke and record the results.
4. Compare the time expected by ASPIRE2 with the actual recorded time. If there are any significant differences check the pipe for breaks.

## Smoke Pellet Testing

This method is suitable for the testing of high and enhanced sensitivity environments. Smoke is produced by lighting a smoke pellet. You will need a smoke pellet, tray, a way to time the test. If you are testing in an area with a high roof you may also require a heater to fix stratification problems. See*Testing and Stratification Problems* section which is earlier in this section for details.

1. Ensure that the local fire panel is isolated from the external fire reporting equipment and that any automatic extinguishing or suppressant systems are similarly isolated.
2. Cover a metal tray with kitchen foil
3. Put the smoke pellet on a metal tray
4. Put something under the tray to protect the floor from damage
5. If you are testing a high roof area turn the heater on
6. Light the pellet with a match, and start the timer
7. The detector should register the smoke within 120 seconds of ignition

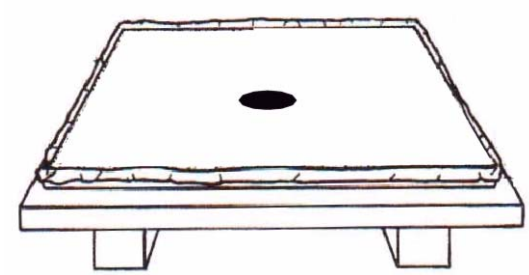

*Figure 14 - Smoke Pellet Testing*

For further information on Smoke Pellet Testing see BFPSA11 standards.

## Polyurethane Mat Smoke Testing

This method is suitable for the testing of standard sensitivity fire detection systems. A controlled fire is produced by lighting of flexible polyurethane foam mat. This test is suitable for testing smoke detection in open areas such as warehouses and atriums.

**Warning: The burning of polyurethane foam generates toxic gases. We recommend you use appropriate protective equipment.**

1. Ensure that the local fire panel is isolated from the external fire reporting equipment and that any automatic extinguishing or suppressant systems are similarly isolated.
2. Cover a metal tray with kitchen foil
3. Put the mat into the tray
4. Put something under the tray to protect the floor from damage
5. Ignite a corner of the mat with a match, and start a stop watch
6. The detector should register the smoke within 120 seconds of ignition

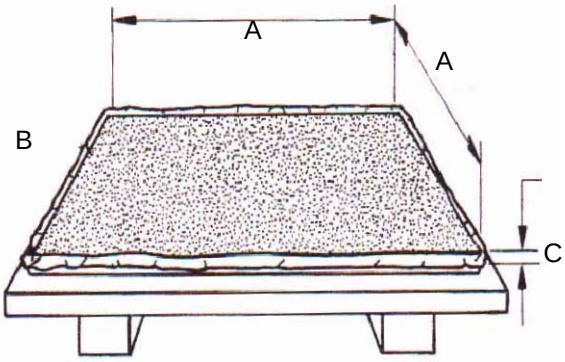


| Legend | |
|---|---|
| A | 500 mm (20 In.) |
| B | Kitchen foil in tray |
| C | 20 mm (0.874 In.) |

*Figure 15 - Polyurethane Mat Smoke Test*

## Wire Burn Smoke Testing

This test is performed by using a transformer to overload the power running through two meters of PVC-coated wire. To simulate the early stages of a fire, a length of wire is electrically overloaded so that smoke or vapors are driven off. This method is suitable for the testing of high sensitivity fire detection systems. This test may also be undertaken in underfloor spaces or ceiling voids.

**Note:** The wire used in this testing must be 1 m in length, of 10/0.1 mm strands insulated with PVC to a radial thickness of 0.3 mm, the cross sectional area of the conductor being 0.078 $mm^2$.

Vision Fire & Security have developed a test kit to assist field testing of wire burns. For more information please contact your nearest VESDA office and ask for information on VTT 10000.

These instructions are written assuming that you are using a VTT-100 test kit.

**Warning:** **This test will burn the PVC coating off the wire. Do not hold the wire during testing. Do not breath in the smoke as it is harmful to your health. We recommend you remotely turn the transformer on or use appropriate protective equipment.**

1. Ensure that the local fire panel is isolated from the external fire reporting equipment and that any automatic extinguishing or suppressant systems are also isolated.
2. With the power turned off, connect each end of a 1 meter (3 ft.) length of the specified wire to the VTT-100.
3. Ensure that the wire is laid on an insulating board to avoid damage to the floor.
4. Check that there are no kinks or crossovers in the wire.
5. Connect power to the VTT-100 and turn the power on for 180 seconds.

At this point, there is 6 VAC applied across the test wire, the switch will illuminate and the green indicator on the timer will begin to flash. The test wire will become hot and a small quantity of smoke will be generated.

6. Turn the unit off after the timed burn period is complete.


*Figure 16 - Wire Burn Test Kit VTT-10000*

# 1.6 Listing of Spare Parts for Laser Products

VSP-000 Blank plate, non-EMC painted, with VESDA logo

VSP-001 Programmer Module

VSP- 002 Display Module

VSP- 003 VESDAnet Socket Kit

VSP- 004 Scanner Display Module

VSP- 005 Filter Cartridge

VSP- 006 VLP Detector Chassis Assembly complete with Manifold

VSP- 007 No relay Remote termination card (RTC0)

VSP- 008 7-relay Remote termination card (RTC7)

VSP- 009 Scanner Chassis Assembly complete with Manifold

VSP- 013 Detector Cover Assembly complete with EMC shields

VSP- 014 7-relay Head Termination Card (HTC7)

VSP- 015 LaserPLUS Detector Aspirator Assembly

VSP- 016 12-relay Head Termination Card (HTC12)

VSP- 019 Filter Cover

VSP- 021 Imperial Pipe Adaptors (25 mm to 27 mm) (4 off)

VSP-100 Blank plate with FIRE 1 & OK LEDs, non-EMC painted, with VESDA logo

VSP-101 Blank plate with French FIRE 1 & Fault (FF) LEDs, non-EMC painted, with Printed logo

VSP-102 Detector Relay Processor Module (Blank + DRP)

VSP-103 Scanner Relay Processor Module (Blank + DRP)

VSP-200 Blank plate, EMC painted, without VESDA logo

VSP-208 12-relay Remote termination card (RTC12)

VSP-300 Blank plate, non-EMC painted, without VESDA logo

VSP-501 LaserCOMPACT Aspirator

VSP-502 LaserCOMPACT VN Remote Display Module

VSP-509 VESDAlink™ RS232 9-pin to 9-pin Serial Cable

VSP-510 LaserCOMPACT RO Termination Card (CTC-RO)

VSP-515 LaserCOMPACT VN Termination Card (CTC-VN)

VSP-540 Exhaust Deflector (black)

VSP-715 VLF Aspirator

# Index

## S



## T



## V



## Z